SIEMENS

Electromotoric actuator

SSF161.05HF, SSB161.05HF, SSC161.05HF, SSC161.35HF



For globe/control valves VVP45.., VXP45.., VMP45.., VVP47.., VXP47.., VMP47.. in zone and room applications

- Operating voltage AC/DC 24 V, positioning signal DC 0...10 V
- Self calibrating to the valve stroke
- Direct mounting with coupling nut, no tools required
- Manually adjustable, position and actuator motion indication (LED)
- SSF161.05HF, SSB161.05HF: Positioning force 200 N
- SSC161.05HF, SSC161.35HF: Positioning force 300 N
- Parallel operation of multiple actuators possible
- Removable cable, standard length 1.5 m

  Optionally as accessories: Cable length 3 m and 6 m, halogen-free cables
- SSC161.35HF with electrical fail-safe function

Use

Typically in chilled ceiling, VAV and fan coil unit applications SSF…:

- For 2-port small valves and 3-port small valves VVP47..; VXP47.. and VMP47..
- For retrofitting the small valves 2W..K.., 3W.., 4W..with adapter AL100 SSB..
- For 2-port valves and 3-port valves VVP45..; VXP45.. and VMP45.. up to Kvs 6.3
  Typically in chilled ceiling, VAV, fan coil unit, heating and cooling coils as well as pre-control loop applications SSC…
- For 2-port valves and 3-port valves VVP45..; VXP45.. and VMP45..
- For Landis & Gyr valves VVG45.., VXG45.. and X3i with adapter ASK30

Technical design

When the actuator is driven by DC 0…10 V positioning signal, it produces a stroke, which is transmitted to the valve stem.

DC 0…10 V positioning signal

- The valve opens / closes in proportion to the positioning signal at Y.
- At DC 0 V, actuator stem is retracted, the normally closed valve is fully closed.
- When there is no operating voltage, the actuator maintains its current position.
- The actuator provides a position feedback signal U of DC 0…10 V proportional to the calibrated valve stroke.

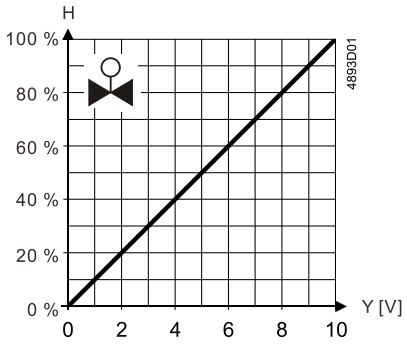

Y = Positioning signal Y [V]

H = Percentage of calibrated valve stroke

U = Position feedback signal

LED indication

Status	LED indication patterns
Variants	SSF161.05HF, SSB161.05HF, SSC161.05HF, SSC161.35HF 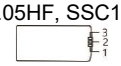
Stroke movement: Stem retracting	Flashing green in sequence: LED1-->LED2-->LED3 (500 ms each)
Stroke movement: Stem extending	Flashing green in sequence: LED3-->LED2-->LED1 (500 ms each)
Stem stays in position	At H0 - H40: Constant green (LED3) At H40 - H60: Constant green (LED2) At H60 - H100: Constant green (LED1)
Fail-safe*	Flashing red (LED2): 500 ms on, 500 ms off
Calibration	Flashing green (LED2): 100 ms on, 100 ms off
Error**	Constant red (LED2)
Manual operation	Flashing green/red alternatively (LED2): Green 500 ms, red 500 ms
Super-cap initial charging*	Constant green & red simultaneously (LED2): Constant orange

* Only available for SSC161.35HF

** Error caused by mechanical jam or calibration failure. Calibration through resetting the operating voltage required.

Type summary

Type	Stock number	Operating voltage	Running speed	Nominal force	Stroke range	Positioning signal	Actuator characteristic	Cable length	Coupling nut
SSF161.05HF	S55180-A131	AC/DC 24 V	5 s/mm	200 N	1.2...6.5 mm	DC 0…10 V	Linear	1.5 m	M30×1.5, plastic
SSB161.05HF	S55180-A134	AC/DC 24 V	5 s/mm	200 N	1.2...6.5 mm	DC 0…10 V	Linear	1.5 m	¾", plastic
SSC161.05HF	S55155-A101	AC/DC 24 V	5 s/mm	300 N	1.2...6.5 mm	DC 0…10 V	Linear	1.5 m	¾", metal
SSC161.35HF	S55155-A102	AC/DC 24 V	5 s/mm	300 N	1.2...6.5 mm	DC 0…10 V	Linear	1.5 m	¾", metal

Accessories

Type	Stock number	Number of wires and cross section [mm²]	Voltage [V]	Cable length [m]
ASY161L15	S55845-Z266	5x0.34	24	1.5
ASY161L30	S55845-Z267	5x0.34	24	3
ASY161L60	S55845-Z268	5x0.34	24	6
ASY161L15HF	S55845-Z269	5x0.34 halogen free	24	1.5
ASY161L30HF	S55845-Z270	5x0.34 halogen free	24	3
ASY161L60HF	S55845-Z271	5x0.34 halogen free	24	6

Ordering

When ordering, specify both type and quantity.

Example:

Type	Stock number	Designation	Quantity
SSF161.05HF	S55180-A131	Electromotoric actuator	2

Delivery

Valves and actuators must be ordered separately. For easier valve assembly, actuators ordered separately have the actuator stem fully retracted.

Equipment combinations

SSF161.05HF combinable with the following valves

Type reference	Valve type	K_{vs} [m³/h]	PN class	Data sheet
VVP47..	2-port valves	0.25…4.0	PN 16	N4847
VXP47..	3-port valves	0.25…4.0		N4847
VMP47..	3-port valves with T-bypass	0.25…2.5		N4847
2W…K…[1)]	2-port valves	0.6…2.5		N4846
3W…[1)]	3-port valves	0.6…4.0		N4846
4W…[1)]	3-port valves with T-bypass	0.6…2.5		N4846
Others	Valves (M30x1.5) from other manufacturers, without adapter	-	-	-

[1)] With assembly adapter AL100

SSB161.05HF combinable with the following valves

Type reference	Valve type	K_{vs} [m^3/h]	PN class	Data sheet
VVP45..	2-port valves	0.25…6.3	PN 16	N4845
VVP45..S	2-port valves, for compression fittings	0.63…2.5		N4854
VXP45..	3-port valves	0.25…6.3		N4845
VMP45..	3-port valves with T-bypass	0.25…4.0		N4845
VMP45..S	3-port valves with T-bypass, for compression fittings	0.63…2.5		N4854
Others	Valves (¾") from other manufacturers, without adapter	-	-	-

Note: SSB.. Actuators are not suitable for valves VVP45..N.

SSC161.05HF, SSC161.35HF combinable with the following valves

Type reference	Valve type	K_{vs} [m^3/h]	PN class	Data sheet
VVP45..	2-port valves	0.25…25	PN 16	N4845
VVP45..N	2-port valves	2.5…6.3		N4840
VXP45..	3-port valves	0.25…25		N4854
VMP45..	3-port valve with T-bypass	0.25…4.0		N4845
VVG45..[1)]	2-port valves	0.63…25		Retrofitting former Landis & Gyr valves
VXG45..[1)]	3-port valves	0.63…25		
X3i..[1)]	3-port valves	0.7…14		
Others	Valves (¾") from other manufacturers, without adapter	-	-	-

[1)]With assembly adapter ASK30

Note: To ensure trouble-free operation of third-party valves with the actuator, the valves must satisfy the following requirements:

- Threaded connections with coupling nut:
  - SSF161.05HF: M30×1.5; open dimension X ≥ 11.4 mm; closed dimension Y ≤ 14.2 mm
  - SSC161.05HF, SSC161.35HF, SSB161.05HF: ¾"; open dimension X ≥ 8.8 mm; closed dimension Y ≤ 14.3 mm
- Nominal force:
  - SSF161.05HF, SSB161.05HF: 200 N
  - SSC161.05HF, SSC161.35HF: 300 N

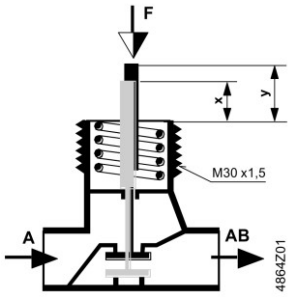

SSF161.05HF

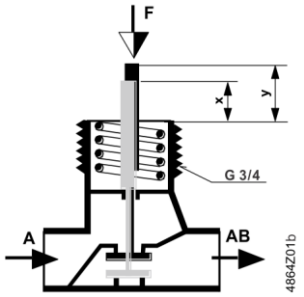

SSB161.05HF, SSC161.05HF, SSC161.35HF

Combinable, programable room automation stations

Type	AC/DC 24 V; DC 0…10 V
DXR2	DXR2..
RXB..	RXB39.1..

Combinable room thermostats

Type	Detail
RDG..	RDG260, RDG264KN, RDG160T, RDG160KN
RDU..	RDU340
RCU..	RCU50..

Product documentation

Topic	Title	Document ID
Mounting and installation	Mounting instructions [1)]	A6V13122035
Standards and directives	CE conformity declarations	A5W00254962A
	RCM conformity declaration	A5W00254983A
Environmental compatibility	Environmental declarations	A5W00242127A

[1)] The mounting instructions are enclosed with the product.

Related documents such as the environmental declarations, declarations of conformity, etc., can be downloaded from the following Internet address:

www.siemens.com/bt/download

Notes

Engineering

The actuators must be electrically connected in accordance with local regulations (see "Connection diagrams [► 14]").

⚠ CAUTION



National safety regulations

Failure to comply with national safety regulations may result in personal injury and property damage.

- Observe national provisions and comply with the appropriate safety regulations.

Observe permissible temperatures (see "Technical data [► 11]"). The connecting cable of the actuator may come into contact with the hot valve body, provided the temperature of the valve body does not exceed 80 °C.

Mounting

⚠ WARNING	
	● Do not use pipe wrenches, spanners or similar tools. ● Avoid lateral pressure or (cable) tension on the mounted actuator!

It is easy to mount the actuator on the valve before commissioning

- Remove the protective cover of the valve body.
- Position the actuator and tighten the coupling nut manually.
- See "Mounting instructions" enclosed with the product package for graphical instructions.

Orientation

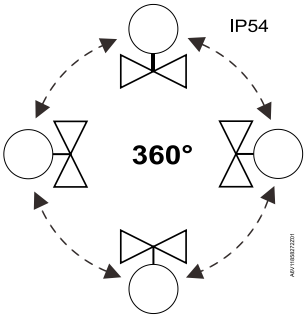

Installation

	A [mm]	B [mm]	C [mm]
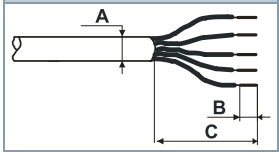	5.5	6.0	60
	Crimp ferrule on stripped wire of connecting cable.		

- Observe all admissible temperatures (see "Technical data [▶ 11]").
- Do not twist the cable.
- Magnets can damage the actuator.
- Provide a means for isolation from the power supply, e.g., connecting a circuit breaker or switch fuse upstream of the control unit.

⚠ CAUTION	
	**National safety regulations** Failure to comply with national safety regulations may result in personal injury and property damage. ● Observe national provisions and comply with the appropriate safety regulations.

⚠ CAUTION	
	**Phase cut and pulse-duration-modulated (PDM) signals are not permitted.** **Regulations and requirements to ensure the safety of people and property must be observed at all times!**

Commissioning

When commissioning, check wiring and functioning of the actuator.

- Actuator stem extends — Normally open valve closes, normally closed valve opens
- Actuator stem retracts — Normally open valve opens, normally closed valve closes

NOTICE	
!	The actuator must be commissioned only with a correctly mounted valve in place!

Self-calibration

When operating voltage is applied, the actuator self-calibrates (fully retracted ➙ fully extended ➙ setpoint).

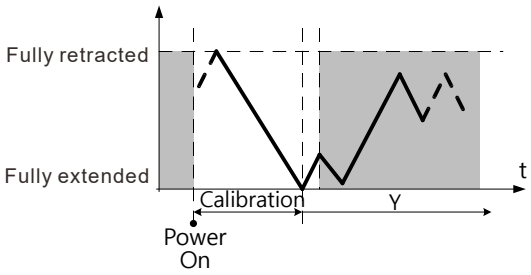

⚠ CAUTION	
	Never intervene manually during self-calibration.

NOTICE	
!	• Correct calibration is only possible with valve stroke > 1.2 mm. Valve stroke < 1.2 mm results in calibration failure. • If calibration fails, the actuator performs another calibration automatically after 10 seconds. • After three failed calibration attempts, the actuator stem remains in the extended position and the valves are closed. The state of the LED then changes to "stays red".

Electrical fail-safe function (only for SSC161.35HF)

When first connected to power, or after a power failure, the capacitor which stores energy for the fail-safe function will be charged. This process takes up to 180 seconds. While the capacitor is being charged, the actuator cannot respond to any control signals.

In the event of a power failure of more than 5 seconds, the actuator will return to its fail-safe position within 30 seconds.

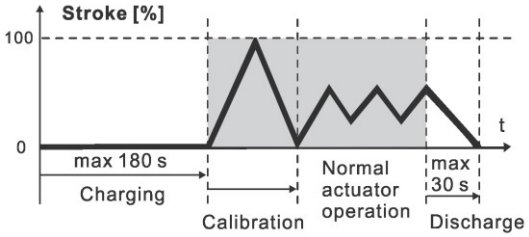

Manual operation

A 3-mm hexagonal wrench can be used to move the actuator to any position.

To move the actuator stem manually

1. Open the cover using a proper screwdriver. Note that IP54 protection does not apply if the cover is open.
2. Press and hold down button (a) illustrated below for at least three seconds.
   – The actuator ignores any positioning signal from the controller.
3. Adjust the position of the actuator stem by rotating Allen wrench (b) illustrated below clockwise or anti-clockwise.
   – The actuator stem moves down if you rotate clockwise; it moves up if you rotate anti-clockwise. The manually set position is retained.
4. To exit manual operation mode, press and hold down button (a) illustrated below again for at least three seconds.
   – The actuator runs a self-calibration automatically. Positioning signal sent from the controller takes effect.
5. Close the cover to ensure IP54 protection.

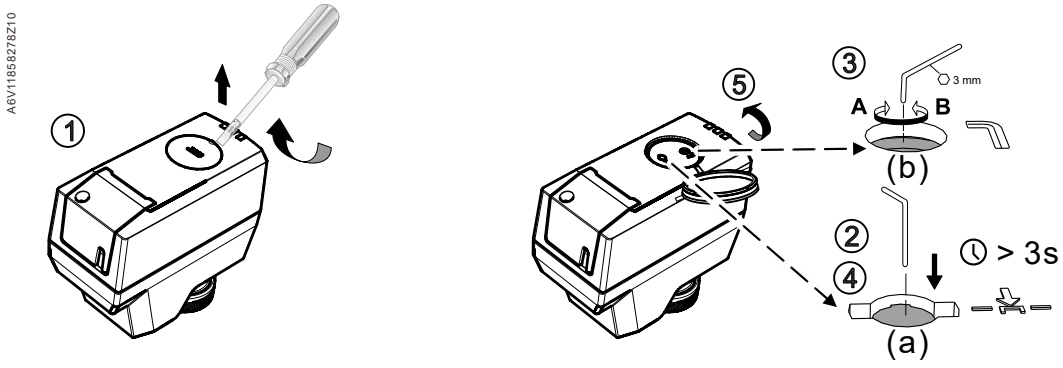

NOTICE	
!	**If operating voltage is applied to actuator, press button (a) before and after manually adjusting the position of the actuator stem so that the actuators ignores the positioning signal.** If no operating voltage and positioning signal are applied, manual operation can be done without pressing button (a). If the actuator position is manually adjusted in automatic operation (without carrying out point b), this can lead to errors (see LED indication)

Maintenance

The actuators require no maintenance.

⚠ WARNING	
	**Operating voltage must be switched off during any site maintenance!**

NOTICE	
!	When carrying out service work on the plant, note the following: • If necessary, disconnect electrical connections from the terminals. • The actuator must be commissioned only with a correctly mounted valve in place!

Warranty

Technical data on specific applications are valid only together with Siemens products listed under "Equipment combinations". Siemens rejects any and all warranties in the event that third-party products are used.

Open Source Software (OSS)

Software license overview

These devices use Open Source Software (OSS). All Open Source Software components used in the product (to include copyrights and licensing agreement) are available at http://siemens.com/bt/download.

Firmware version	OSS document		Device
	Document ID	Title	
2.10.0 or above	A6V13503690	Readme OSS for Modulating Room Actuator 200 N, 300 N	All

Technical data

Power supply		
Operating voltage	SSF161.05HF, SSB161.05HF	AC 24 V (± 15 %) or DC 24 V (± 20 %)
	SSC161.05HF, SSC161.35HF	AC 24 V (± 20 %) or DC 24 V (± 20 %)
Frequency	50/60 Hz	
Power consumption	Normal operation	SSF161.05HF, SSB161.05HF: 3 VA SSC161.05HF, SSC161.35HF: 3.5 VA
Primary fuse or breaker rating	External, 2 A quick blow	

Signal input	
Positioning signal	DC 0…10 V
Input impedance	100 kΩ
Parallel operation (number of actuators)	Max. 10[1)]

[1)] Provided that the controller output is sufficient.

Signal output	
Feedback signal U	DC 0.3…9.7 V
Max. output current	1 mA
Resolution	1:100

Operating data	
Position with de-energized positioning signal Y	0 %
Running speed	< 5 s/mm ± 25 %
Positioning force	Min. 200 N: SSF161.05HF, SSB161.05HF Min. 300 N: SSC161.05HF, SSC161.35HF
Stroke	1.2…6.5 mm
Permissible temperature of medium in the connected valve	1…120 °C

Electrical connection (connecting cable)	
Cable length (integral)	1.5 m, according to VDE 0207
Cross section of pre-wired connection cables	0.34 mm^2 (5 ×)
Permissible length for signal lines	20 m

Mounting	
Fixing on valve	Coupling nut M30 × 1.5: SSF161.05HF ¾" inch: SSB161.05HF, SSC161.05HF, SSC161.35HF
Orientation	360°

Standards	
EU conformity declaration (CE)	A5W00254962A
RCM conformity declaration	A5W00254983A
UK conformity declaration (UKCA)	A5W00257055A
Housing protection degree	IP 54
Protection class according to EN 60730	III
Pollution degree	2
Overvoltage category	I
Environmental compatibility	The product environmental declaration (A5W00242127A) contains data on environmentally compatible product design and assessments (RoHS compliance, materials composition, packaging, environmental benefit, disposal).
UL Approval Federal Communications Commission	UL as per UL60730-1, UL60730-2-14 http://ul.com/database cUL as per CSA – CAN E60730-1, E730-2-14 FCC CFR 47 Part 15 Class B
ICES003	CAN ICES-3 (B)/NMB-3(B)

FCC regulations

Modification of this device to receive cellular radio telephone service signals is prohibited under FCC rules and federal law.

This equipment has been tested and found to comply with the limits for a Class B digital device, pursuant to part 15 of the FCC Rules. These limits are designed to provide reasonable protection against harmful interference in a residential installation. This equipment generates, uses and can radiate radio frequency energy and, if not installed and used in accordance with the instructions, may cause harmful interference to radio communications. However, there is no guarantee that interference will not occur in a particular installation. If this equipment does cause harmful interference to radio or television reception, which can be determined by turning the equipment off and on, the user is encouraged to try to correct the interference by one or more of the following measures:

Reorient or relocate the receiving antenna.

Increase the separation between the equipment and receiver.

Connect the equipment into an outlet on a circuit different from that to which the receiver is connected.

Consult the dealer or an experienced radio/TV technician for help.

Changes or modifications not expressly approved by the party responsible for compliance could void the user's authority to operate the equipment.

Statement

This device complies with part 15 of the FCC Rules. Operation is subject to the following two conditions: (1) This device may not cause harmful interference, and (2) this device must accept any interference received, including interference that may cause undesired operation.

Housing color	
Cover/base	2003, Ti-Gray
Coupling nut	SSF161.05HF, SSB161.05HF: RAL 9017 SSC161.05HF, SSC161.35HF: Metal

General ambient conditions			
	Operation	**Transport**	**Storage**
Environmental conditions	Class 3K3	Class 2K3	Class 1K3
Temperature	1…50 ℃	-25…70 ℃	-25…70 ℃
Humidity	5…95 % r.h. non condensing	< 95 % r.h. non condensing	5…95 % r.h. non condensing
Atmospheric pressure	Min. 700 hPa, corresponding to max. 3,000 m above sea level	-	-

Material	
Cover/base	PC + ABS

Weight	
SSF161.05HF	294 g
SSB161.05HF	298 g
SSC161.05HF	320 g
SSC161.35HF	341 g

Diagrams

Connection terminals

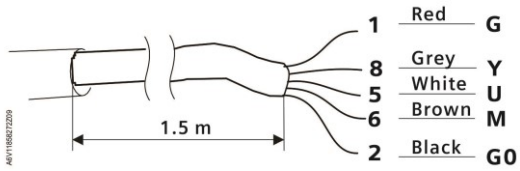

Code	No.	Color	Abbreviation	Meaning
G	1	Red	RD	System potential (AC/DC 24 V)
Y	8	Grey	GY	Positioning signal DC 0…10 V
U	5	White	WH	Positioning feedback signal
M	6	Brown	BR	Measurement reference
G0	2	Black	BK	System neutral

Connection diagrams

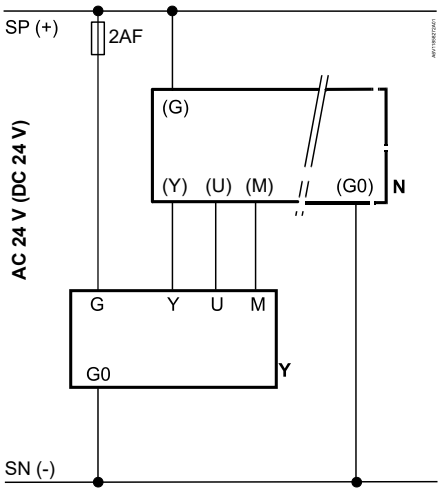

N = Controller

Y = Positioning signal (DC 0…10 V)

SP, G = System potential (AC/DC 24 V)

SN, G0 = System neutral

U = Positioning feedback signal

M = Measurement reference

Dimensions

mm

SSC161.05HF, SSC161.35HF

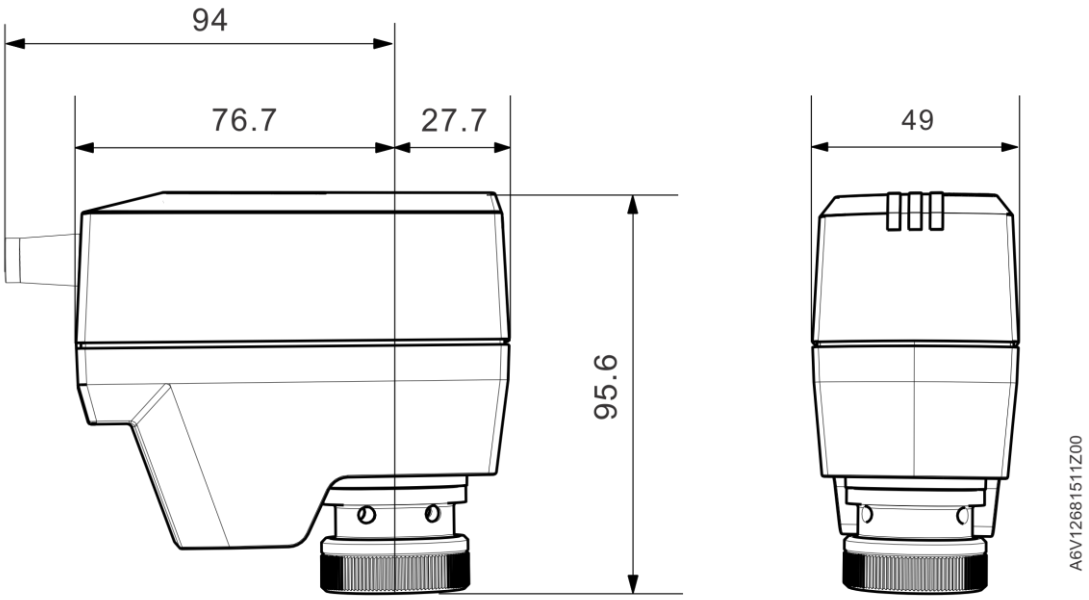

SSB161.05HF

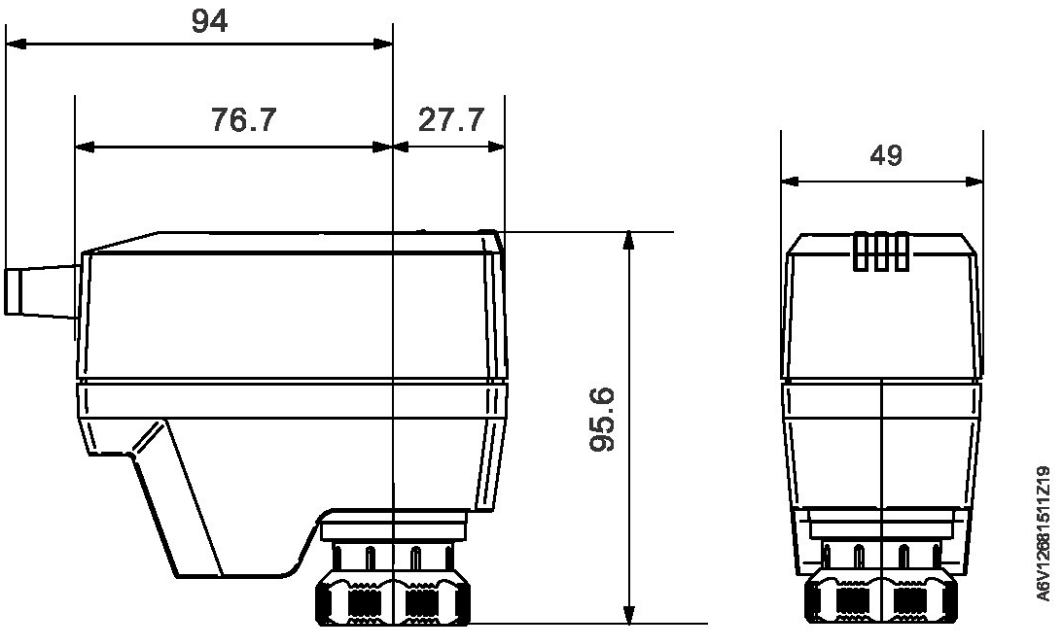

SSF161.05HF

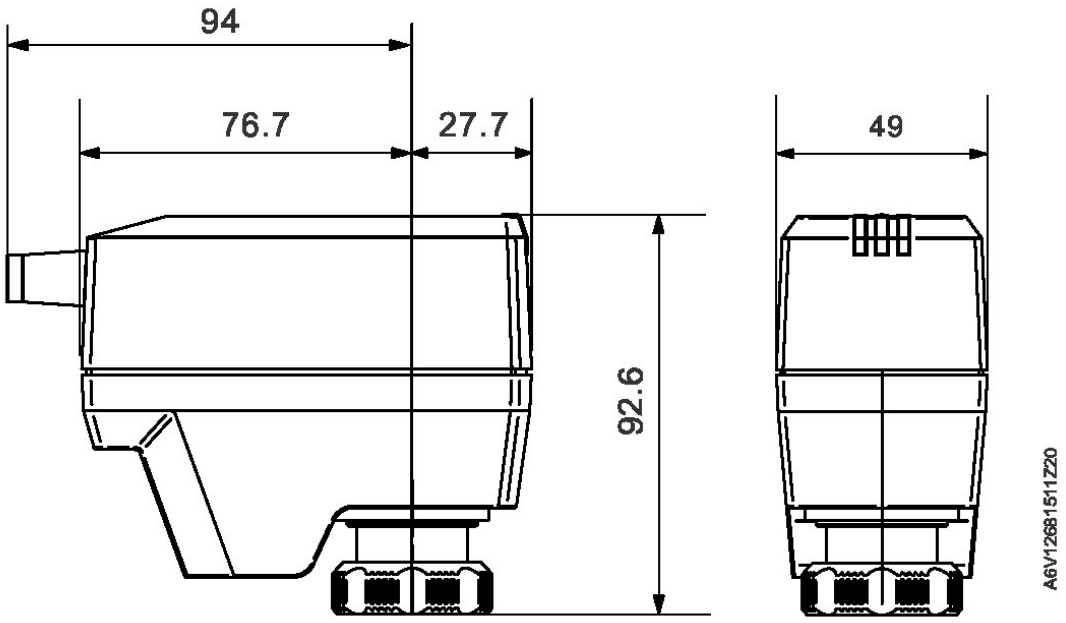

Revision numbers

Type	Valid from rev. no.
SSF161.05HF	..A
SSB161.05HF	..A
SSC161.05HF	..A
SSC161.35HF	..A

Issued by
Siemens Switzerland Ltd
Smart Infrastructure
Global Headquarters
Theilerstrasse 1a
CH-6300 Zug
+41 58 724 2424
www.siemens.com/buildingtechnologies

© Siemens 2023
Technical specifications and availability subject to change without notice.

Document ID A6V12681511_en--_c

Edition 2023-06-26